# APPENDIX D

# FIRE APPARATUS ACCESS ROADS

***The provisions contained in this appendix are not mandatory unless specifically referenced in the adopting ordinance.***

## SECTION D101
## GENERAL

**D101.1 Scope.** Fire apparatus access roads shall be in accordance with this appendix and all other applicable requirements of the *International Fire Code*.

## SECTION D102
## REQUIRED ACCESS

**D102.1 Access and loading.** Facilities, buildings or portions of buildings hereafter constructed shall be accessible to fire department apparatus by way of an approved fire apparatus access road with an asphalt, concrete or other approved driving surface capable of supporting the imposed load of fire apparatus weighing at least 75,000 pounds (34 050 kg).

## SECTION D103
## MINIMUM SPECIFICATIONS

**D103.1 Access road width with a hydrant.** Where a fire hydrant is located on a fire apparatus access road, the minimum road width shall be 26 feet (7925 mm). See Figure D103.1.

**D103.2 Grade.** Fire apparatus access roads shall not exceed 10 percent in grade.

**Exception:** Grades steeper than 10 percent as approved by the fire chief.

**D103.3 Turning radius.** The minimum turning radius shall be determined by the fire code official.

**D103.4 Dead ends.** Dead-end fire apparatus access roads in excess of 150 feet (45 720 mm) shall be provided with width and turnaround provisions in accordance with Table D103.4.

**TABLE D103.4**
**REQUIREMENTS FOR DEAD-END FIRE APPARATUS ACCESS ROADS**

| LENGTH (feet) | WIDTH (feet) | TURNAROUNDS REQUIRED |
|---|---|---|
| 0–150 | 20 | None required |
| 151–500 | 20 | 120-foot Hammerhead, 60-foot "Y" or 96-foot-diameter cul-de-sac in accordance with Figure D103.1 |
| 501–750 | 26 | 120-foot Hammerhead, 60-foot "Y" or 96-foot-diameter cul-de-sac in accordance with Figure D103.1 |
| Over 750 | Special approval required | |

For SI: 1 foot = 304.8 mm.

**D103.5 Fire apparatus access road gates.** Gates securing the fire apparatus access roads shall comply with all of the following criteria:

1. The minimum gate width shall be 20 feet (6096 mm).

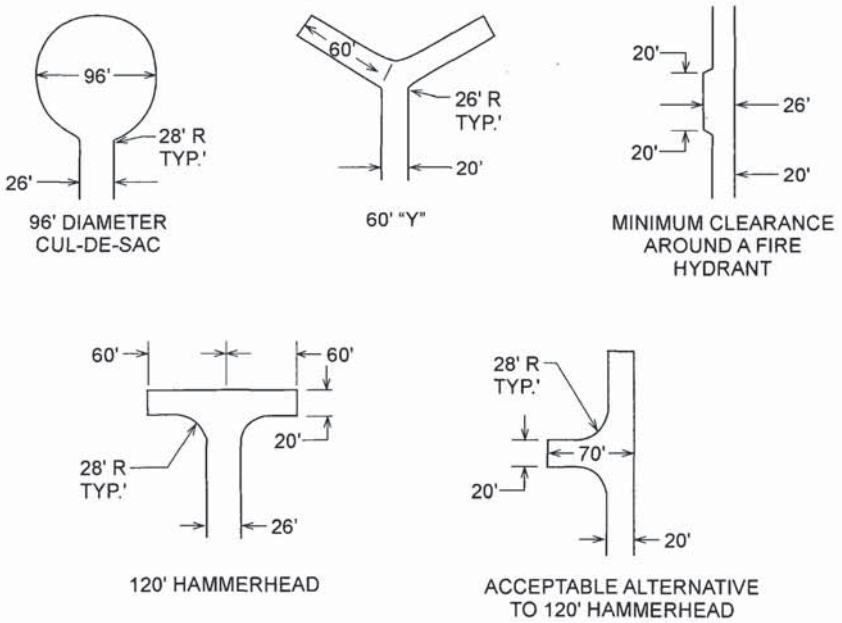


For SI: 1 foot = 304.8 mm.

**FIGURE D103.1**
**DEAD-END FIRE APPARATUS ACCESS ROAD TURNAROUND**

2. Gates shall be of the swinging or sliding type.
3. Construction of gates shall be of materials that allow manual operation by one person.
4. Gate components shall be maintained in an operative condition at all times and replaced or repaired when defective.
5. Electric gates shall be equipped with a means of opening the gate by fire department personnel for emergency access. Emergency opening devices shall be approved by the fire code official.
6. Manual opening gates shall not be locked with a padlock or chain and padlock unless they are capable of being opened by means of forcible entry tools or when a key box containing the key(s) to the lock is installed at the gate location.
7. Locking device specifications shall be submitted for approval by the fire code official.

**D103.6 Signs.** Where required by the fire code official, fire apparatus access roads shall be marked with permanent NO PARKING—FIRE LANE signs complying with Figure D103.6. Signs shall have a minimum dimension of 12 inches (305 mm) wide by 18 inches (457 mm) high and have red letters on a white reflective background. Signs shall be posted on one or both sides of the fire apparatus road as required by Section D103.6.1 or D103.6.2.

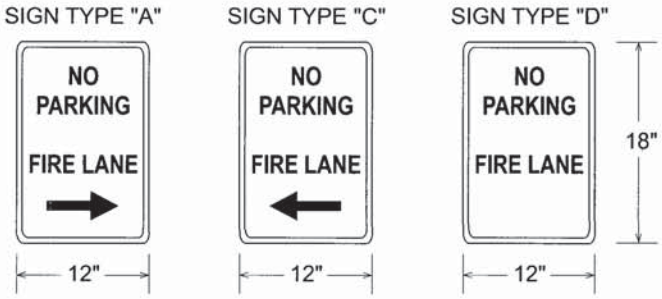


**FIGURE D103.6**
**FIRE LANE SIGNS**

**D103.6.1 Roads 20 to 26 feet in width.** Fire apparatus access roads 20 to 26 feet wide (6096 to 7925 mm) shall be posted on both sides as a fire lane.

**D103.6.2 Roads more than 26 feet in width.** Fire apparatus access roads more than 26 feet wide (7925 mm) to 32 feet wide (9754 mm) shall be posted on one side of the road as a fire lane.

## SECTION D104
## COMMERCIAL AND INDUSTRIAL DEVELOPMENTS

**D104.1 Buildings exceeding three stories or 30 feet in height.** Buildings or facilities exceeding 30 feet (9144 mm) or three stories in height shall have at least three means of fire apparatus access for each structure.

**D104.2 Buildings exceeding 62,000 square feet in area.** Buildings or facilities having a gross building area of more than 62,000 square feet (5760 $m^2$) shall be provided with two separate and approved fire apparatus access roads.

**Exception:** Projects having a gross building area of up to 124,000 square feet (11 520 $m^2$) that have a single approved fire apparatus access road when all buildings are equipped throughout with approved automatic sprinkler systems.

**D104.3 Remoteness.** Where two access roads are required, they shall be placed a distance apart equal to not less than one half of the length of the maximum overall diagonal dimension of the property or area to be served, measured in a straight line between accesses.

## SECTION D105
## AERIAL FIRE APPARATUS ACCESS ROADS

**D105.1 Where required.** Buildings or portions of buildings or facilities exceeding 30 feet (9144 mm) in height above the lowest level of fire department vehicle access shall be provided with approved fire apparatus access roads capable of accommodating fire department aerial apparatus. Overhead utility and power lines shall not be located within the aerial fire apparatus access roadway.

**D105.2 Width.** Fire apparatus access roads shall have a minimum unobstructed width of 26 feet (7925 mm) in the immediate vicinity of any building or portion of building more than 30 feet (9144 mm) in height.

**D105.3 Proximity to building.** At least one of the required access routes meeting this condition shall be located within a minimum of 15 feet (4572 mm) and a maximum of 30 feet (9144 mm) from the building, and shall be positioned parallel to one entire side of the building.

## SECTION D106
## MULTIPLE-FAMILY RESIDENTIAL DEVELOPMENTS

**D106.1 Projects having more than 100 dwelling units.** Multiple-family residential projects having more than 100 dwelling units shall be equipped throughout with two separate and approved fire apparatus access roads.

**Exception:** Projects having up to 200 dwelling units may have a single approved fire apparatus access road when all buildings, including nonresidential occupancies, are equipped throughout with approved automatic sprinkler systems installed in accordance with Section 903.3.1.1 or 903.3.1.2.

**D106.2 Projects having more than 200 dwelling units.** Multiple-family residential projects having more than 200 dwelling units shall be provided with two separate and approved fire apparatus access roads regardless of whether they are equipped with an approved automatic sprinkler system.

## SECTION D107
## ONE- OR TWO-FAMILY RESIDENTIAL DEVELOPMENTS

**D107.1 One- or two-family dwelling residential developments.** Developments of one- or two-family dwellings where the number of dwelling units exceeds 30 shall be provided with separate and approved fire apparatus access roads and shall meet the requirements of Section D104.3.

**Exceptions:**

1. Where there are more than 30 dwelling units on a single public or private fire apparatus access road and all dwelling units are equipped throughout with an approved automatic sprinkler system in accordance with Section 903.3.1.1, 903.3.1.2 or 903.3.1.3.3, access from two directions shall not be required.
2. The number of dwelling units on a single fire apparatus access road shall not be increased unless fire apparatus access roads will connect with future development, as determined by the fire code official.